GENERAL NOTES:

1. STORM PANEL SHOWN ON THIS PRODUCT EVALUATION DOCUMENT (P.E.D.) HAS BEEN VERIFIED FOR COMPLIANCE IN ACCORDANCE WITH THE **2026 (9th EDITION)** OF THE FLORIDA BUILDING CODE. THIS STORM PANEL SHALL **NOT** BE INSTALLED AT HIGH VELOCITY HURRICANE ZONES (MIAMI-DADE / BROWARD COUNTIES).

   DESIGN WIND LOADS SHALL BE DETERMINED AS PER SECTION **1609** OF THE ABOVE MENTIONED CODE, FOR A WIND SPEED AS REQUIRED REQUIRED BY THE JURISDICTION WHERE THESE SHUTTERS WILL BE INSTALLED AND FOR A DIRECTIONALITY FACTOR Kd=0.85, USING **ASCE 7-22** SHALL NOT EXCEED THE MAXIMUM (A.S.D.) DESIGN PRESSURE RATINGS INDICATED ON SHEETS 4 THRU 8.

   IN ORDER TO VERIFY THE ABOVE CONDITION, ULTIMATE DESIGN WIND LOADS DETERMINED PER **ASCE 7-22** SHALL BE FIRST REDUCED TO A.S.D. DESIGN WIND LOADS BY MULTIPLYING THEM BY 0.6 IN ORDER TO COMPARE THESE WITH MAX. (A.S.D.) DESIGN PRESSURE RATINGS INDICATED ON SHEETS 4 THRU 8.

   IN ORDER TO VERIFY THAT COMPONENTS AND ANCHORS ON THIS P.E.D. AS TESTED WERE NOT OVER STRESSED, A 33% INCREASE IN ALLOWABLE STRESS FOR WIND LOADS WAS **NOT** USED IN THEIR ANALYSIS. A DURATION FACTOR CD=1.60 WAS USED FOR VERIFICATION OF FASTENERS IN WOOD,PER NDS 2018.

   STORM PANEL'S ADEQUACY FOR IMPACT AND FATIGUE RESISTANCE HAS BEEN VERIFIED IN ACCORDANCE WITH SECTION **1609.1.2** OF THE ABOVE MENTIONED CODE AS PER ATL REPORTS # 0121.01-98R, # 0329.01-00, #0512.01-03 AND 0617.01-04 AS PER IMPACT TESTING EQUIVALENT TO ASTM E-1996 STANDARD & ASTM E 330-02 STANDARD, LIMITED TO INSTALLATIONS WITHIN WIND ZONES 1, 2 & 3 AS DEFINED BY ASTM E-1996 STANDARD.

2. ALL STEEL SHEET METAL PANELS SHALL HAVE STRUCTURAL QUALITY ASTM A-653, GRADE 40, WITH G-60 GALVANIZED STEEL DESIGNATION.

3. ALL ALUMINUM EXTRUSIONS SHALL BE ALUMINUM ASSOCIATION 6063-T6 ALLOY & TEMPER UNLESS OTHERWISE NOTED. STORM PANEL COMPONENTS (1.2) STUDDED PLATE AND (1.3) SNAP CAP ARE PATENT PENDING. ALL ALUMINUM EXTRUSIONS IN CONTACT WITH DISSIMILAR MATERIALS SHALL COMPLY WITH SECTION III-6 OF THE 2020 ALUMINUM DESIGN MANUAL.

4. ALL SCREWS TO BE STAINLESS STEEL 304 OR 316 AISI SERIES OR CORROSION RESISTANT COATED CARBON STEEL AS PER DIN 50018 WITH 50 ksi YIELD STRENGTH AND 90 ksi TENSILE STRENGTH & SHALL COMPLY WITH FLORIDA BUILDING CODE SECTIONS 2411.3.3.4 & 1711.

5. BOLTS SHALL BE ASTM A-307 GALVANIZED STEEL OR AISI 304 SERIES STAINLESS STEEL, WITH 35 ksi MINIMUM YIELD STRENGTH.

6. ANCHORS TO WALL SHALL BE AS FOLLOWS: (UNLESS OTHERWISE NOTED)

   (A) TO EXISTING POURED CONCRETE:
   - 1/4" ø 410 S.S TAPCON ANCHORS AS MANUFACTURED BY I.T.W. BUILDEX OR 1/4"ø ULTRACON+ OR ULTRACON SS4 BY DEWALT.
   - 1/4" ø CF TAP-GRIP ANCHORS (BERTHA STUD-CON), AS MANUFACTURED BY TRU-FAST CORPORATION.
   - 1/4" ø ELCO male & female "PANELMATE" AS MANUFACTURED BY ELCO CONSTRUCTION PRODUCTS.
   - 1/4" ø ALL THREADED 304 S.S ROD ANCHORS, BY HILLMAN GROUP.

   NOTES:

   A.1) MINIMUM EMBEDMENT INTO POURED CONCRETE OF 1/4" ø ANCHORS IS 1 3/4".

   A.2) FEMALE PANELMATE ANCHORS SHALL BE ENTIRELY EMBEDDED INTO THE POURED CONCRETE. NO EMBEDMENT INTO STUCCO SHALL BE PERMITTED. 1/4"ø-20 SCREWS USED SHALL BE 1 1/2" LONG MINIMUM SHOULD STUCCO EXIST, AND 1" MINIMUM FOR WALLS WITH NO STUCCO.

   A.3) IN CASE THAT PRECAST STONE, PRECAST CONCRETE PANELS, OR PAVERS BE FOUND ON THE EXISTING WALL OR FLOOR, ANCHORS SHALL BE LONG ENOUGH TO REACH THE MAIN STRUCTURE BEHIND SUCH PANELS, ANCHORAGE SHALL BE AS INDICATED ON NOTES A.1) & A.2) ABOVE.

   (B) TO EXISTING CONCRETE BLOCK WALL:
   - 1/4" ø TAPCON ANCHORS AS MANUFACTURED BY I.T.W. BUILDEX OR 1/4"ø ULTRACON+ OR ULTRACON SS4 BY DEWALT.
   - 1/4" ø CF TAP-GRIP ANCHORS (BERTHA STUD-CON), AS MANUFACTURED BY TRU-FAST CORPORATION.
   - 1/4" ø ELCO male & female "PANELMATE" AS MANUFACTURED BY ELCO CONSTRUCTION PRODUCTS
   - 1/4" ø ALL THREADED 304 S.S RODS BY HILLMAN GROUP.
   - 1/4" ø RED HEAD DYNABOLT SLEEVE ANCHORS AS MANUFACTURED BY I.T.W. BUILDEX.

   NOTES:

   B.1) MINIMUM EMBEDMENT OF 1/4"ø ANCHORS INTO CONCRETE BLOCK UNIT SHALL BE 1 1/4".

   B.2) FEMALE PANELMATE ANCHORS SHALL BE ENTIRELY EMBEDDED INTO THE CONCRETE BLOCK UNIT. NO EMBEDMENT INTO STUCCO SHALL BE PERMITTED. 1/4"ø-20 SCREWS USED SHALL BE 1 1/2" LONG MINIMUM SHOULD STUCCO EXIST, AND 1" MINIMUM FOR WALLS WITH NO STUCCO.

   B.3) IN CASE THAT PRECAST STONE OR PRECAST CONCRETE PANELS BE FOUND ON THE EXISTING WALL, ANCHORS SHALL BE LONG ENOUGH TO REACH THE MAIN STRUCTURE BEHIND SUCH PANELS. ANCHORAGE SHALL BE AS INDICATED ON NOTES IN B.1) AND B.2) ABOVE.

   (C) ANCHORS SHALL BE INSTALLED FOLLOWING ALL OF THE RECOMMENDATIONS AND SPECIFICATIONS OF THE ANCHOR'S MANUFACTURER. ONLY STAINLESS STEEL ANCHORS ARE ALLOWED AT INSTALLATION WITHIN 300ft OF THE COASTAL SHORELINE.

7. PANELS MAY ALSO BE INSTALLED HORIZONTALLY FOLLOWING INSTALLATION DETAILS SHOWN ON SECTIONS 1 THRU 8 (SHEET 2 & 3 OF 8) EXCEPT THAT HEADERS 2, 3 & 4 SHALL NOT BE USED.

8. IT SHALL BE THE RESPONSIBILITY OF THE CONTRACTOR TO VERIFY THE SOUNDNESS OF THE STRUCTURE WHERE SHUTTER IS TO BE ATTACHED TO ENSURE PROPER ANCHORAGE. THIS SHUTTER SHALL ONLY BE ATTACHED TO CONCRETE, BLOCK OR WOOD FRAME BUILDINGS.

9. THE INSTALLATION CONTRACTOR IS TO SEAL/CAULK ALL SHUTTER COMPONENT EDGES WHICH REMAIN IN CONTINUOUS CONTACT WITH THE BUILDING TO PREVENT WIND/RAIN INTRUSION. CAULK AND SEAL SHUTTER TRACKS ALL AROUND FULL LENGTH.

10. (a) THIS P.E.D. PREPARED BY THIS ENGINEER IS GENERIC AND DOES NOT PROVIDE INFORMATION FOR A SITE-SPECIFIC PROJECT; i.e. WHERE THE SITE CONDITIONS DEVIATE FROM THE P.E.D.

    (b) THE CONTRACTOR IS TO BE RESPONSIBLE FOR THE SELECTION, PURCHASE AND INSTALLATION INCLUDING LIFE SAFETY OF THIS PRODUCT, BASED ON THIS P.E.D. PROVIDED HE/SHE DOES NOT DEVIATE FROM THE CONDITIONS DETAILED ON THIS DOCUMENT. CONSTRUCTION SAFETY AT SITE IS THE CONTRACTOR'S RESPONSIBILITY.

    (c) THIS P.E.D. WILL BE CONSIDERED INVALID IF ALTERED BY ANY MEANS.

    (d) SITE SPECIFIC PROJECTS SHALL BE PREPARED BY A FLORIDA REGISTERED ENGINEER OR ARCHITECT WHO WILL BECOME THE ENGINEER OF RECORD (E.O.R.) FOR THE PROJECT AND WHO WILL BE RESPONSIBLE FOR THE PROPER USE OF THE P.E.D. ENGINEER OF RECORD, ACTING AS A DELEGATED ENGINEER TO THE P.E.D. ENGINEER, SHALL SUBMIT TO THE LATTER THE SITE SPECIFIC DRAWINGS FOR REVIEW.

    (e) THIS P.E.D. SHALL BEAR THE DATE AND ORIGINAL SEAL AND SIGNATURE OF THE PROFESSIONAL ENGINEER OF RECORD WHO PREPARED IT.

11. SHUTTER MANUFACTURER'S LABEL SHALL BE LOCATED AT A READILY VISIBLE LOCATION ON THE STORM PANEL IN ACCORDANCE WITH SECTION 1709.9.3 OF FLORIDA BUILDING CODE. ONE LABEL SHALL BE PLACED FOR EVERY OPENING. LABELING SHALL COMPLY WITH SECTION 1709.9.2 OF THE FLORIDA BUILDING CODE.

THIS DRAWING SHALL ONLY BE USED TO OBTAIN PERMITS IN THE STATE OF FLORIDA

WALTER A. TILLIT JR. LICENSE No. 44167 STATE OF FLORIDA PROFESSIONAL ENGINEER

7/17/2026

P.E. SEAL/SIGNATURE/DATE

©2026 TILTECO, INC.

TILTECO INC.
TILLIT TESTING & ENGINEERING COMPANY
6355 N.W. 36th. St., Ste. 305, VIRGINIA GARDENS, Fl. 33166
Phone : (305)871-1530 . Fax : (305)871-1531
CA-0006719
WALTER A. TILLIT Jr. P.E.
FLORIDA Lic. # 44167

FLORIDA BUILDING CODE (Non High Velocity Hurricane Zone)

24 GAGE GALVANIZED BERTHA STEEL STORM PANEL (2.25" DEEP)

EASTERN METAL SUPPLY, INC
4268 WEST ROADS DRIVE
WEST PALM BEACH, FL. 33407
PHONE: (561)209-8263
FAX: (561)841-1716

REV. No	DESCRIPTION	DATE	REV. No	DESCRIPTION	DATE
1	OLD 23-160	7/23/26	3		
2			4		

W.H.
DRAWN BY:

7/23/2026
DATE:

26-231
DRAWING No

SHEET 1 OF 8

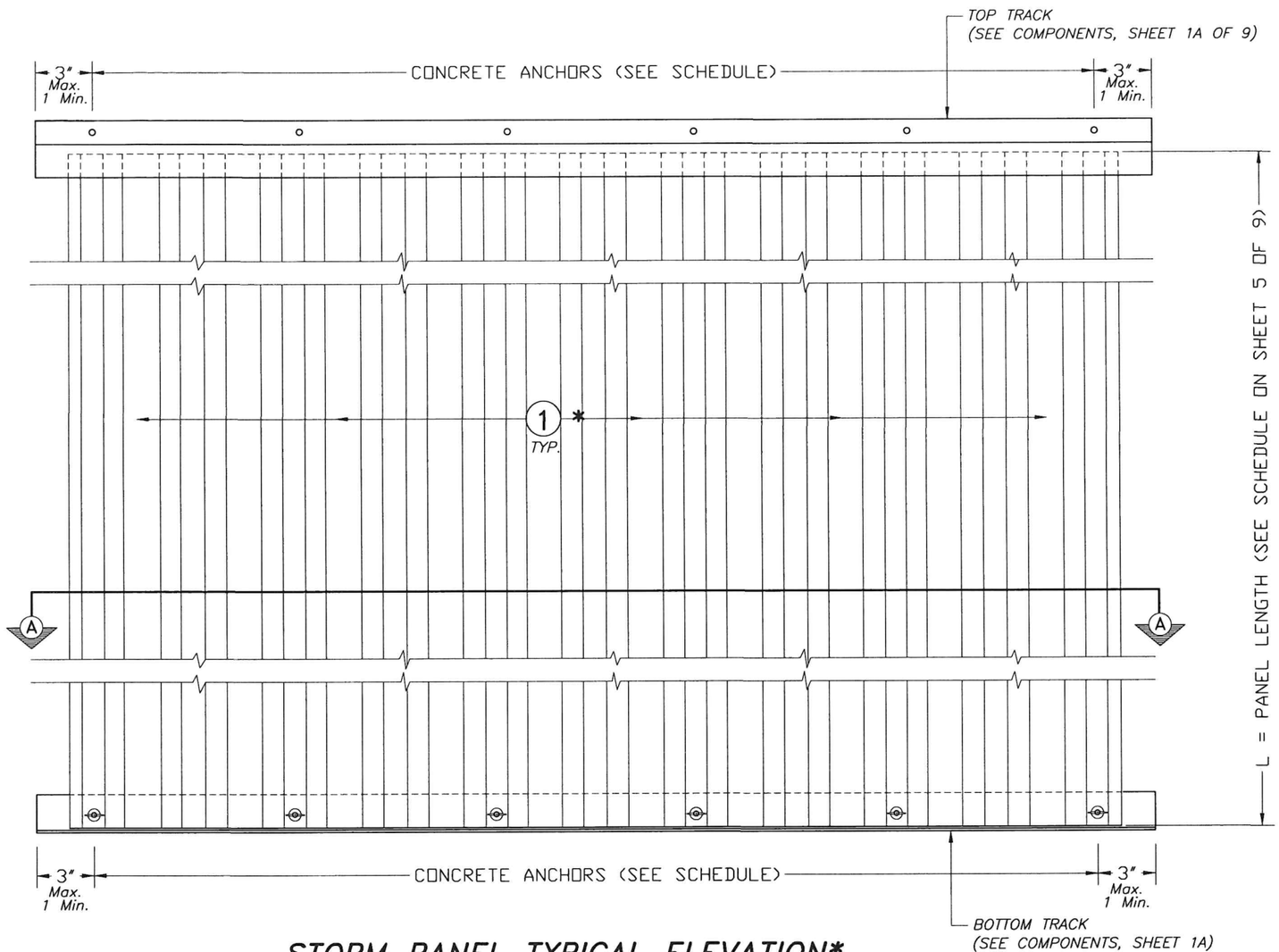

STORM PANEL TYPICAL ELEVATION*

SCALE : 1/8" = 1"

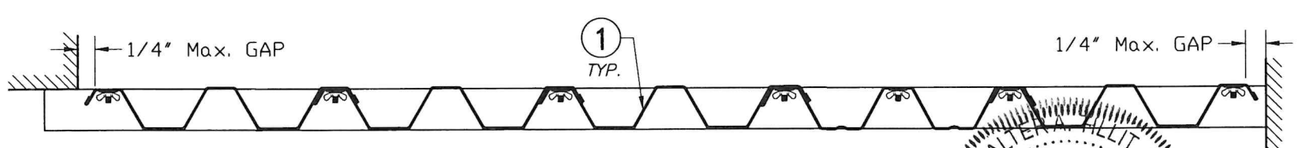

SECTION A–A

SCALE : N.T.S

* PANEL 1 MAYBE COMBINED WITH APPROVED 2 1/4" CLEAR STORM PANELS THROUGH THE OPENING BEING PROTECTED WITH NO LIMITATION FOR THEIR PARTICULAR ORDER OR INSTALLATION SEQUENCE, AS LONG AS THE FOLLOWING CONDITIONS COMPLIED WITH:

1. MAXIMUM PANEL LENGTH SHALL BE DETERMINED AS PER SCHEDULES INDICATED ON SHEET #4 OF 5 TILTECO Inc. DRAWING #26–229 (CLEAR BERTHA STORM PANEL). THIS MAXIMUM PANEL LENGTH SHALL APPLY FOR THE CORRESPONDING A.S.D DESIGN WIND LOAD FOR THE GIVEN OPENING, WHICH SHALL BE DETERMINED AS PER SECTION 1609 OF THE 2026 (9TH EDITION) OF THE FLORIDA BUILDING CODE.
2. INSTALLATION OF COMBINATION PANELS SHALL ONLY BE PERFORMED WITH THE APPROVED MOUNTINGS INDICATED ON SHEET #3 OF 5 OF DRAWING #26–229 (CLEAR BERTHA STORM PANEL). NO OTHER MOUNTING INSTALLATION WILL BE ALLOWED.
3. ANCHOR SPACING FOR FASTENERS USED FOR THE CONNECTION OF STORM PANELS MENTIONED ON ITEM #2 ABOVE SHALL BE AS PER SCHEDULE INDICATED ON SHEET #4 OF 5 OF DRAWING #26–229 (CLEAR BERTHA STORM PANEL).
4. END CLOSURE DETAILS SHALL BE AS INDICATED ON SHEET #4 OF 5 OF DRAWING #26–229 (CLEAR BERTHA STORM PANEL).

FLORIDA BUILDING CODE (Non High Velocity Hurricane Zone)

WALTER A. TILLIT JR. LICENSE No. 44167 STATE OF FLORIDA PROFESSIONAL ENGINEER

P.E. SEAL/SIGNATURE/DATE

© 2026 TILTECO, INC.

TILTECO INC.
TILLIT TESTING & ENGINEERING COMPANY
6355 N.W. 36th. St., Ste. 305, VIRGINIA GARDENS, Fl. 33166
Phone : (305)871–1530 . Fax : (305)871–1531
CA–0006719
WALTER A. TILLIT Jr. P.E.
FLORIDA Lic. # 44167

24 GAGE GALVANIZED BERTHA STEEL STORM PANEL (2.25" DEEP)

EASTERN METAL SUPPLY, INC
4268 WEST ROADS DRIVE
WEST PALM BEACH, FL. 33407
PHONE: (561)209–8263
FAX: (561)841–1716

REV. No	DESCRIPTION	DATE	REV. No	DESCRIPTION	DATE
1	OLD 23–160	7/23/26	3		
2			4		

W.H.
DRAWN BY:

7/23/2026
DATE:

26–231
DRAWING No

SHEET 1A OF 8

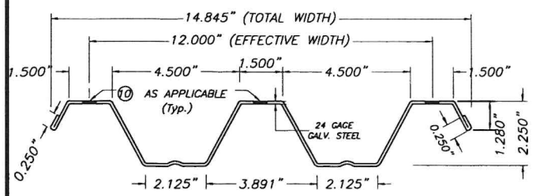

FULL PANEL W/ HEMMED EDGES

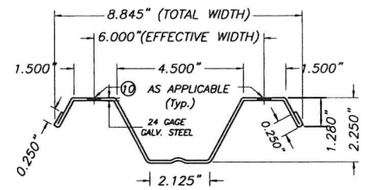

HALF PANEL W/ HEMMED EDGES

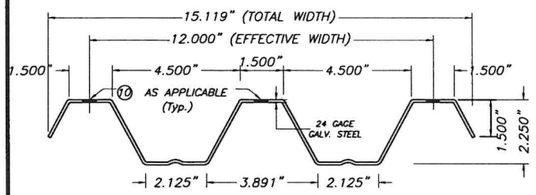

OPTIONAL FULL PANEL W/O HEMMED EDGES

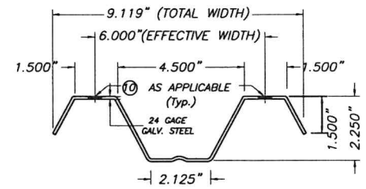

OPTIONAL HALF PANEL W/O HEMMED EDGES

1 SOLID STORM PANEL

SCALE : 3/16" = 1"

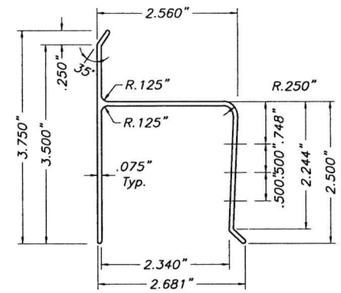

2 "h" HEADER

SCALE : 3/8" = 1"

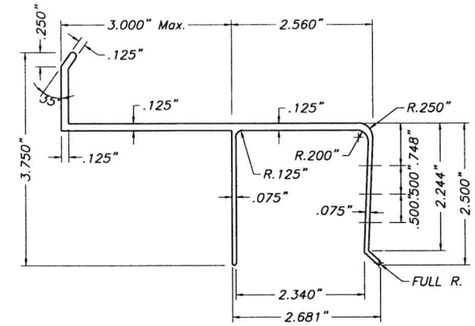

3 3" Max. "U" BUILD OUT

SCALE : 3/8" = 1"

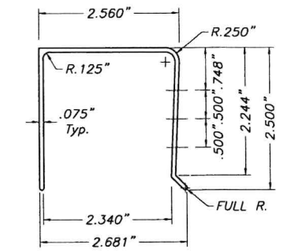

4 "U" HEADER

SCALE : 3/8" = 1"

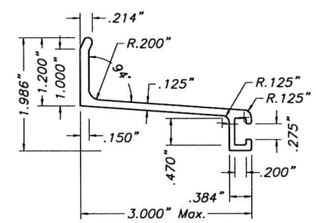

5 3" ANGLE BUILD OUT BRACKET

SCALE : 3/8" = 1"

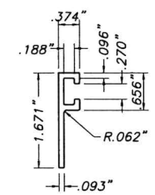

6 3/8" B. O. "F" TRACK

SCALE : 3/8" = 1"

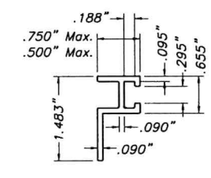

6A 3/4" B. O. "F" TRACK

SCALE : 3/8" = 1"

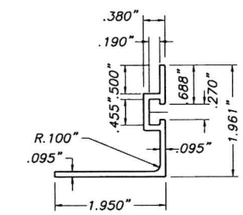

7 REVERSED "F" ANGLE TRACK

SCALE : 3/8" = 1"

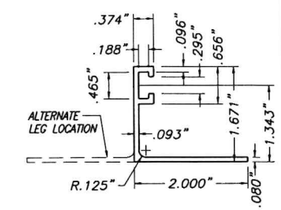

8 "F" TRACK ANGLE

SCALE : 3/8" = 1"

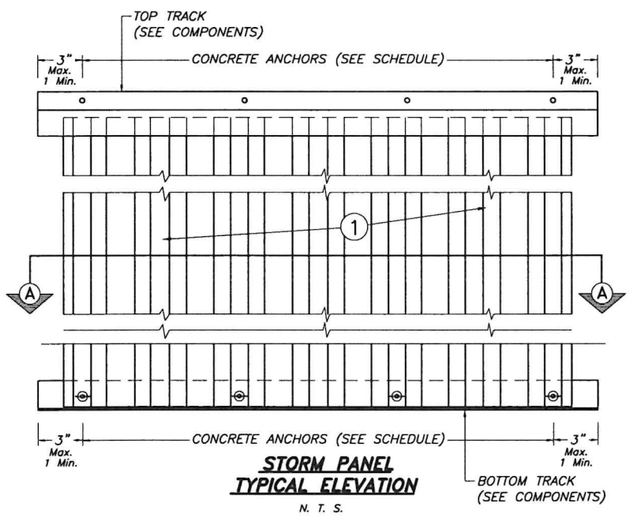

STORM PANEL TYPICAL ELEVATION

N. T. S.

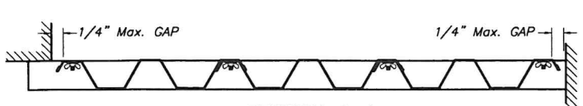

SECTION A-A

N. T. S.

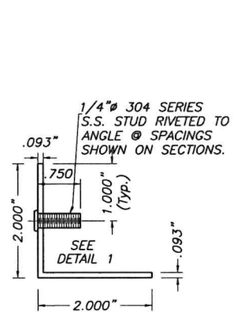

9 STUDDED ANGLE

6063-T5 Alum. ALLOY
SCALE : 3/8" = 1"

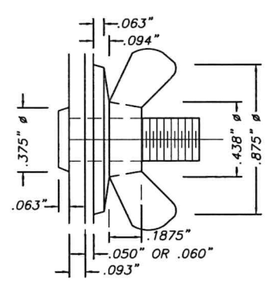

DETAIL 1: STUD W/ DIE CAST ZINC NICKEL PLATED WING NUT

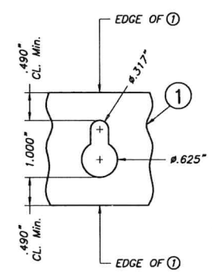

OPTION 1

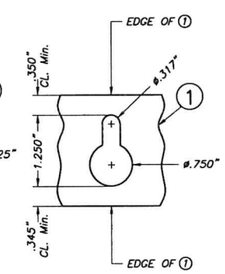

OPTION 2

10 KEY HOLE AT PANEL

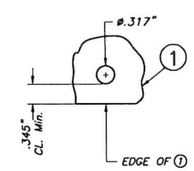

10A ROUND HOLE AT PANEL (OPTION TO 10)

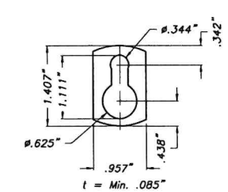

11 KEY HOLE WASHER

3105-H154 Alum. ALLOY
SCALE : 3/8" = 1"

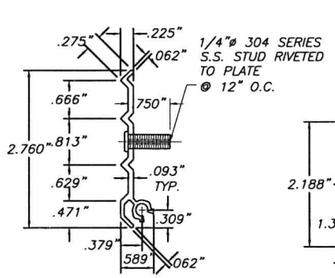

12 STUDDED PLATE

6063-T6 ALLOY
SCALE : 3/8" = 1"

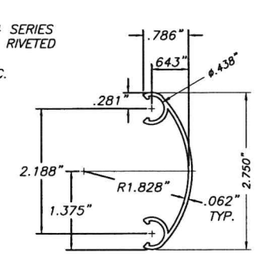

13 SNAP CAP

6063-T6 ALLOY
SCALE : 3/8" = 1"

WALTER A. TILLIT JR.
LICENSE
No 44167
STATE OF FLORIDA
PROFESSIONAL ENGINEER

P.E. SEAL/SIGNATURE/DATE

©2026 TILTECO, INC.

TILTECO INC.

TILLIT TESTING & ENGINEERING COMPANY
6355 N.W. 36th. St., Ste. 305, VIRGINIA GARDENS, Fl. 33166
Phone : (305)871-1530 . Fax : (305)871-1531
CA-0006719
WALTER A. TILLIT Jr. P.E.
FLORIDA Lic. # 44167

FLORIDA BUILDING CODE (Non High Velocity Hurricane Zone)

24 GAGE GALVANIZED BERTHA STEEL STORM PANEL (2.25" DEEP)

EASTERN METAL SUPPLY, INC
4268 WEST ROADS DRIVE
WEST PALM BEACH, FL. 33407
PHONE: (561)209-8263
FAX: (561)841-1716

REV. No	DESCRIPTION	DATE	REV. No	DESCRIPTION	DATE
1	OLD 23-160	7/23/26	3		
2			4		

W.H.
DRAWN BY:

7/23/2026
DATE:

26-231
DRAWING No

SHEET 1B OF 8

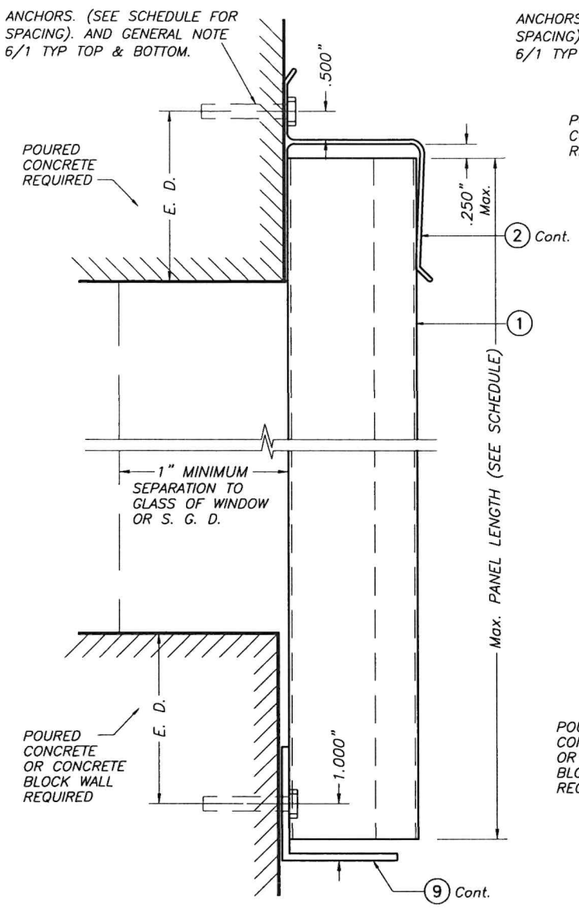

SECTION @ ANCHOR

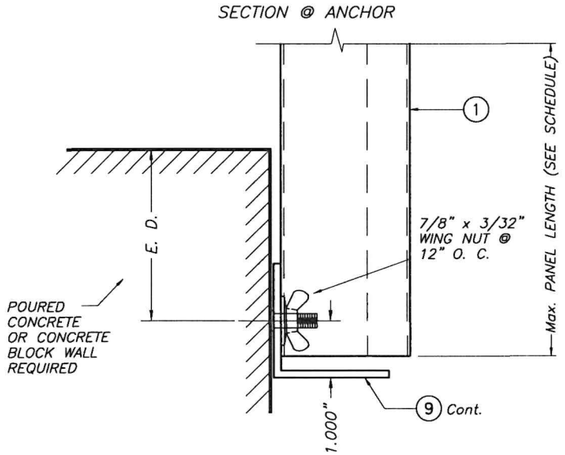

SECTION @ STUD

WALL MOUNTING INSTALLATION

SECTION 1

SCALE : 3/8" = 1"

NOTE : DETAIL OF SECTION @ STUD VALID ALSO FOR WALL MOUNTING INSTALLATION – SECTION 2 (TOP)

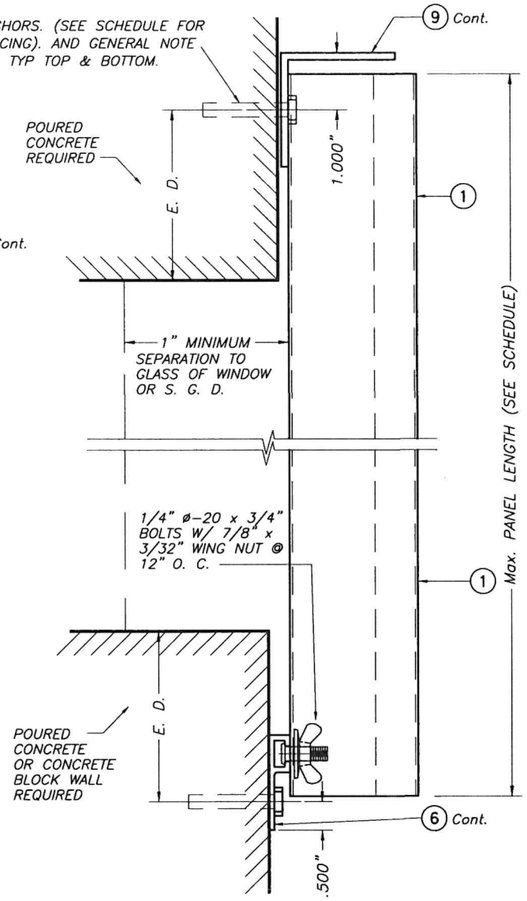

WALL MOUNTING INSTALLATION

SECTION 2

SCALE : 3/8" = 1"

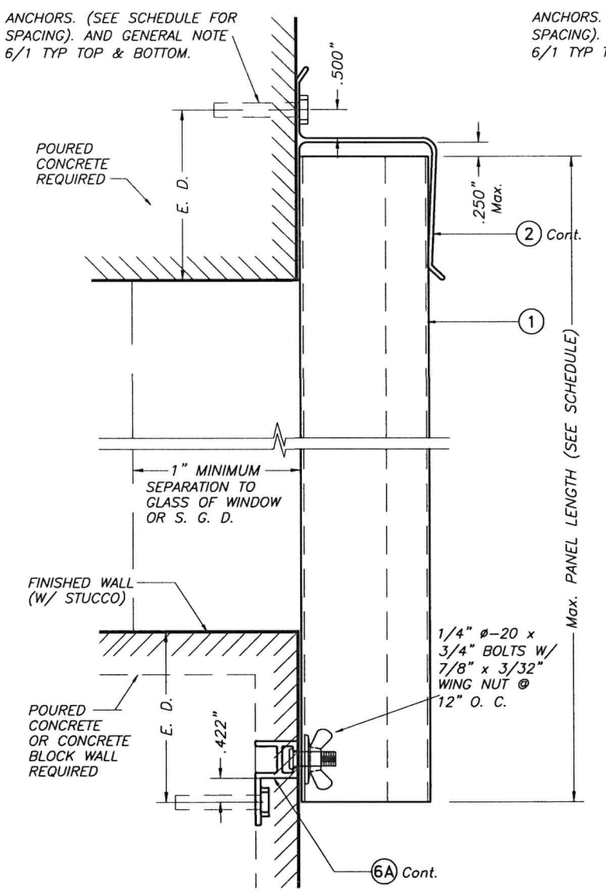

WALL MOUNTING INSTALLATION

SECTION 3

SCALE : 3/8" = 1"

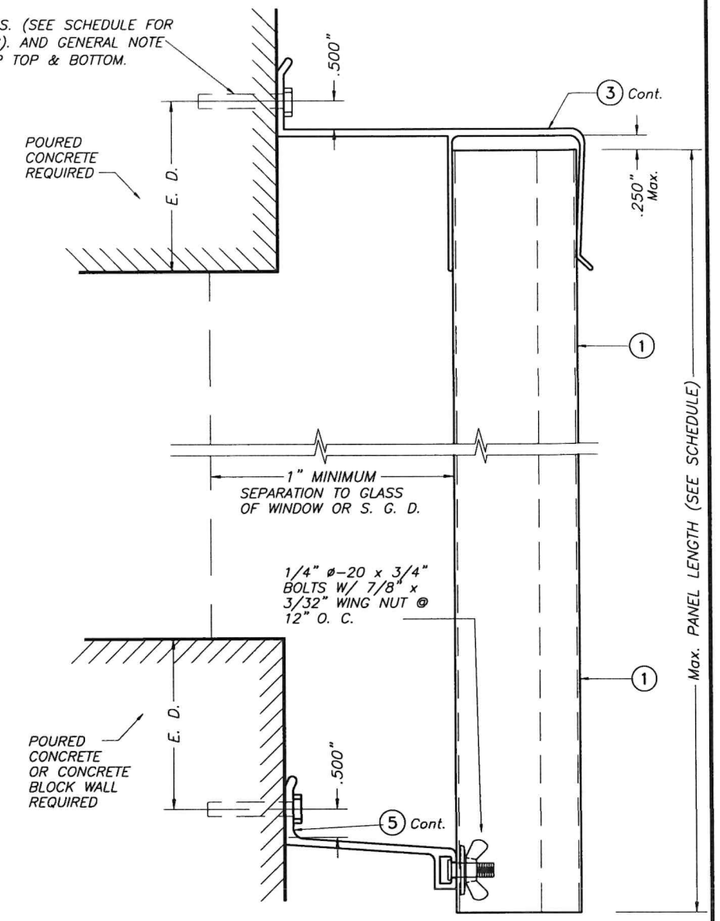

BUILD OUT INSTALLATION

SECTION 4

SCALE : 3/8" = 1"

E. D. = EDGE DISTANCE (SEE SCHEDULE ON SHEETS 5 & 6 OF 8)

NOTE FOR COMBINATION OF SECTIONS :

WALL/FLOOR/CEILING MOUNTING SECTIONS CAN BE COMBINED IN ANY WAY TO SUIT ANY INSTALLATION.

WALTER A. TILLIT JR. LICENSE No. 44167 STATE OF FLORIDA PROFESSIONAL ENGINEER

P.E. SEAL/SIGNATURE/DATE

©2026 TILTECO, INC.

TILTECO INC.
TILLIT TESTING & ENGINEERING COMPANY
6355 N.W. 36th. St., Ste. 305, VIRGINIA GARDENS, Fl. 33166
Phone : (305)871-1530 . Fax : (305)871-1531
CA-0006719
WALTER A. TILLIT Jr. P.E.
FLORIDA Lic. # 44167

FLORIDA BUILDING CODE (Non High Velocity Hurricane Zone)

24 GAGE GALVANIZED BERTHA STEEL STORM PANEL (2.25" DEEP)

EASTERN METAL SUPPLY, INC
4268 WEST ROADS DRIVE
WEST PALM BEACH, FL. 33407
PHONE: (561)209-8263
FAX: (561)841-1716

REV. No	DESCRIPTION	DATE	REV. No	DESCRIPTION	DATE
1	OLD 23-160	7/23/26	3		
2			4		

W.H.
DRAWN BY:

7/23/2026
DATE:

26-231
DRAWING No

SHEET 2 OF 8

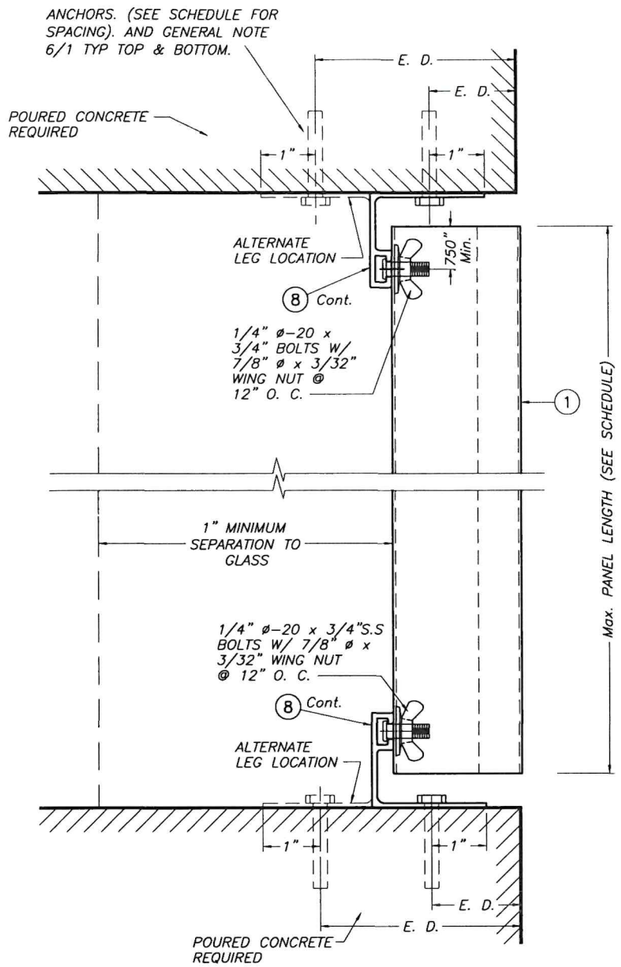

CEILING & FLOOR MOUNTING INSTALLATION – SECTION 5

SCALE : 3/8" = 1"

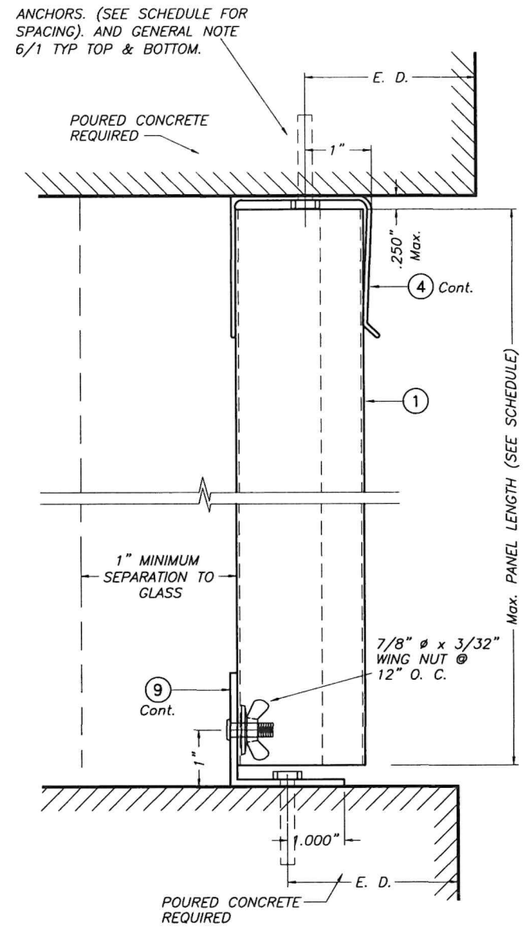

CEILING & FLOOR MOUNTING INSTALLATION – SECTION 6

SCALE : 3/8" = 1"

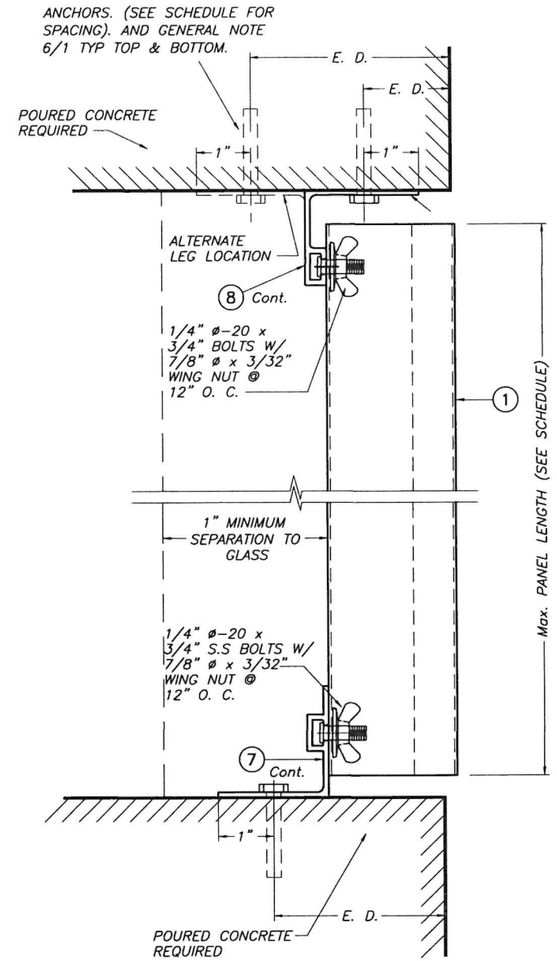

CEILING & FLOOR MOUNTING INSTALLATION – SECTION 7

SCALE : 3/8" = 1"

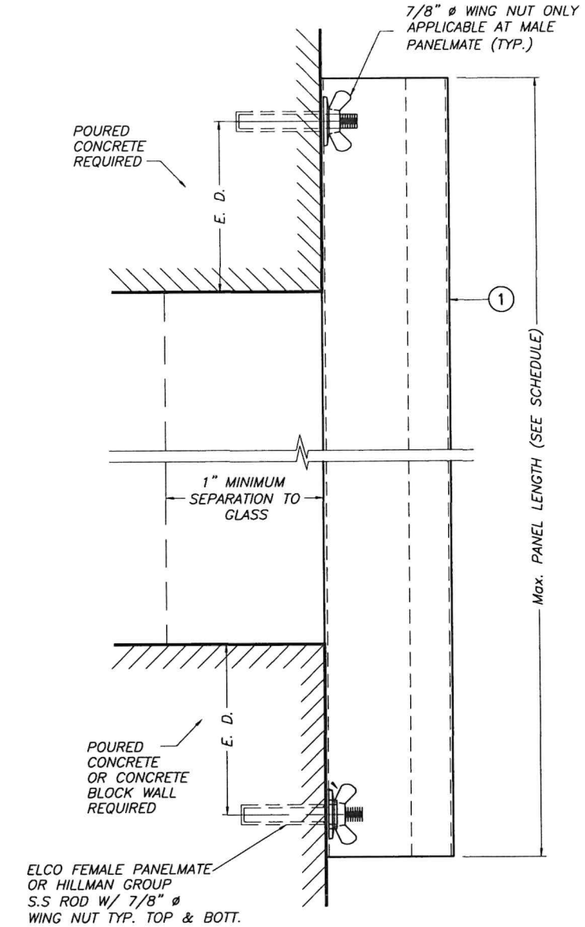

WALL MOUNTING INSTALLATION (D. M.) – SECTION 8

SCALE : 3/8" = 1"

E. D. = EDGE DISTANCE (SEE SCHEDULE ON SHEET 5 & 6 OF 8)

NOTE FOR COMBINATION OF SECTIONS :

WALL/FLOOR/CEILING MOUNTING SECTIONS CAN BE COMBINED IN ANY WAY TO SUIT ANY INSTALLATION.

*
SIDE WALK BOLTS ARE 3/4"øx3/32" THICK S.S. HEAD MACHINE SCREW W/LENGTH AS PER NOTES A.2 & B.2 (SHEET 1)
*
TRUSS HEAD BOLTS ARE 1/2"øx1/8" THICK S.S HEAD MACHINE SCREW W/LENGTH AS PER NOTES A.2 & B.2 (SHEET 1)

FLORIDA BUILDING CODE (Non High Velocity Hurricane Zone)

WALTER A. TILLIT JR. LICENSE No. 44167 STATE OF FLORIDA PROFESSIONAL ENGINEER

1/7/2026

P.E. SEAL/SIGNATURE/DATE

© 2026 TILTECO, INC.

TILTECO INC.
TILLIT TESTING & ENGINEERING COMPANY
6355 N.W. 36th. St., Ste. 305, VIRGINIA GARDENS, Fl. 33166
Phone : (305)871-1530 . Fax : (305)871-1531
CA-0006719
WALTER A. TILLIT Jr. P.E.
FLORIDA Lic. # 44167

24 GAGE GALVANIZED BERTHA STEEL STORM PANEL (2.25" DEEP)

EASTERN METAL SUPPLY, INC
4268 WEST ROADS DRIVE
WEST PALM BEACH, FL. 33407
PHONE: (561)209-8263
FAX: (561)841-1716

REV. No	DESCRIPTION	DATE	REV. No	DESCRIPTION	DATE
1	OLD 23-160	7/23/26	3		
2			4		

W.H.
DRAWN BY:

7/23/2026
DATE:

26-231
DRAWING No

SHEET 3 OF 8

MAXIMUM A.S.D. DESIGN PRESSURE RATING (p.s.f.) AND CORRESPONDING MAXIMUM PANEL LENGTH "L" (Ft.) SCHEDULE

MAXIMUM A.S.D. DESIGN PRESSURE RATING (p.s.f.)	Max. PANEL LENGTH L (ft.) 24 GAGE STEEL		
	MOUNTING W/O "h" HEADER (2)	MOUNTING W/ "h" HEADER (2)	MOUNTING W/ COMP. (12) & (13)
+35.0, −40.0	9'−8"	9'−8"	9'−8"
+40.0, −45.0	9'−2"	9'−2"	9'−2"
+45.0, −50.0	8'−9"	8'−9"	8'−9"
+50.0, −55.0	8'−4"	8'−4"	8'−4"
+60.0, −65.0	7'−8"	7'−2"	7'−8"
+70.0, −80.0	7'−2"	6'−3"	7'−2"

NOTE: MINIMUM PANEL LENGTH IS 3'−0".

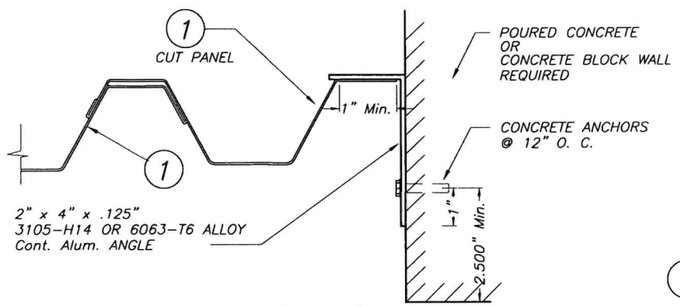

CASE A (Plan)

SCALE: 1/4" = 1"

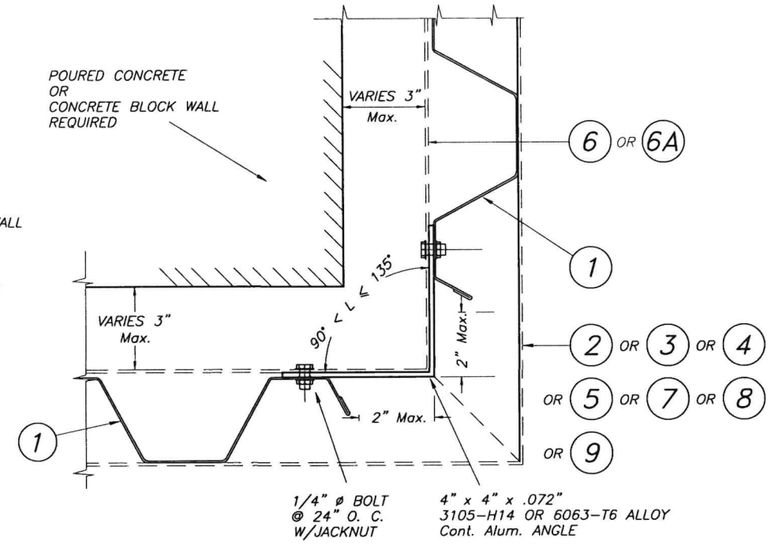

CASE B (Plan)

SCALE: 1/4" = 1"

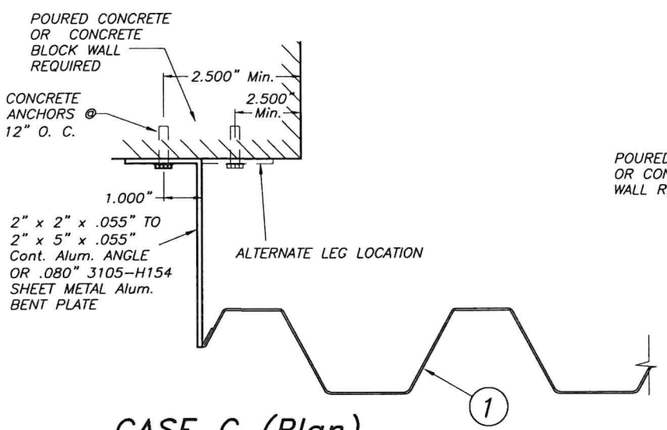

CASE C (Plan)

SCALE: 1/4" = 1"

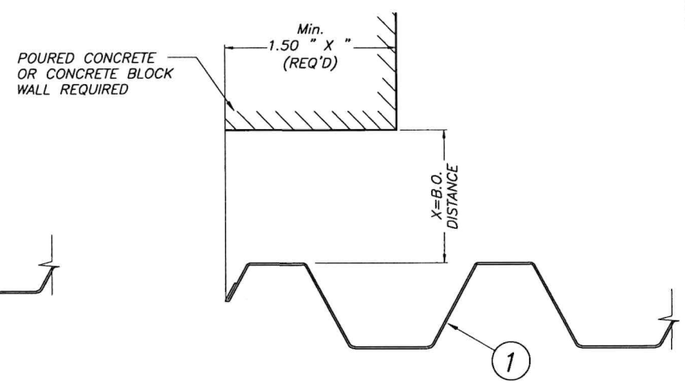

CASE E (Plan)

SCALE: 1/4" = 1"

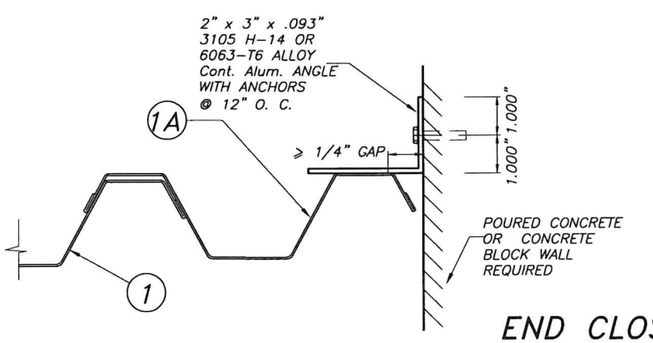

CASE D (Plan)

SCALE: 1/4" = 1"

END CLOSURES DETAILS

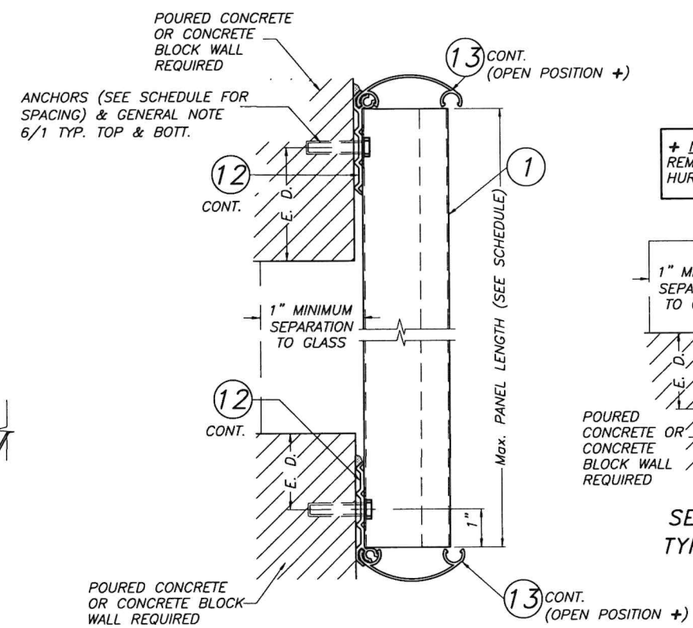

+ NOTE: SNAP CAP (13) TO REMAIN CLOSED AT NON HURRICANE CONDITIONS.

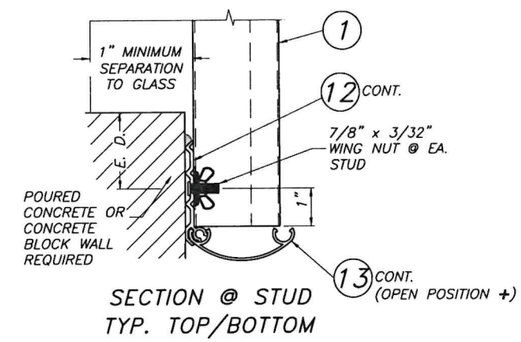

SECTION @ STUD
TYP. TOP/BOTTOM

WALL MOUNTING INSTALLATION
SECTION 9

SCALE : 3/8" = 1"

FLORIDA BUILDING CODE (Non High Velocity Hurricane Zone)

WALTER A. TILLIT JR. LICENSE No. 44167 STATE OF FLORIDA PROFESSIONAL ENGINEER

7/2026

P.E. SEAL/SIGNATURE/DATE

©2026 TILTECO, INC.

TILTECO INC.
TILLIT TESTING & ENGINEERING COMPANY
6355 N.W. 36th. St., Ste. 305, VIRGINIA GARDENS, Fl. 33166
Phone : (305)871-1530 . Fax : (305)871-1531
CA-0006719
WALTER A. TILLIT Jr. P.E.
FLORIDA Lic. # 44167

24 GAGE GALVANIZED BERTHA STEEL STORM PANEL (2.25" DEEP)

EASTERN METAL SUPPLY, INC
4268 WEST ROADS DRIVE
WEST PALM BEACH, FL. 33407
PHONE: (561)209-8263
FAX: (561)841-1716

REV. No	DESCRIPTION	DATE	REV. No	DESCRIPTION	DATE
1	OLD 23-160	7/23/26	3		
2			4		

W.H.
DRAWN BY:

7/23/2026
DATE:

26-231
DRAWING No

SHEET 4 OF 8

THIS SCHEDULE INDICATES REQUIRED ANCHOR SPACING FOR A GIVEN DESIGN LOAD AND PANEL LENGTH. HOWEVER MAXIMUM PANEL LENGTH FOR A GIVEN DESIGN LOAD MUST BE VERIFIED AS PER SCHEDULE ON SHEET 4 OF 8.

MAXIMUM A.S.D. DESIGN PRESSURE RATING (p.s.f.) AND CORRESPONDING MAXIMUM ANCHOR SPACING SCHEDULE FOR INSTALLATIONS INTO CONCRETE AND CONCRETE BLOCK STRUCTURES *

E. D. = EDGE DISTANCE

MAXIMUM A.S.D. DESIGN PRESSURE RATING(p.s.f.)	MAXIMUM ANCHORS SPACING FOR E. D. = 3 1/2" **								APPLICABLE TO SECTIONS # & ANY COMBINATION OF THEM	MAXIMUM PANEL LENGTH "L" (ft.)
	TAPCONS OR ULTRACONS		RED HD. DYNABOLT		PANELMATES OR HILLMAN S.S ROD		CF TAP-GRIP			
	TO CONCRETE	TO MASONRY	TO CONCRETE	TO MASONRY	TO CONCRETE	TO MASONRY	TO CONCRETE	TO MASONRY		
+40.0, -45.0 OR LESS	12"	–	12"	–	12"	–	12"	–	1 & 3 (TOP)	8'-0" OR LESS
	12"	9"	12"	12"	12"	12"	12"	9 1/2"	1, 9+(BOTTOM)	
	12"	–	12"	–	12"	–	12"	–	2, 9+(TOP)	
	12"	9"	12"	12"	12"	12"	12"	9 1/2"	2 (BOTTOM)	
	12"	9"	12"	12"	12"	12"	12"	9 1/2"	3 (BOTTOM)	
	12"	–	12"	–	12"	–	12"	–	4 (TOP)	
	12"	9"	12"	12"	12"	12"	12"	9 1/2"	4 (BOTTOM)	
	9"	–	–	–	12"	–	–	–	5 (TOP/BOTTOM) 7 (TOP)	
	12"	–	–	–	12"	–	–	–	6 (TOP)	
	11"	–	–	–	12"	–	–	–	6 (BOTTOM)	
	10"	–	–	–	12"	–	–	–	7 (BOTTOM)	
	–	–	–	–	12"	12"	–	–	8 (TOP/BOTTOM)	
+40.0, -45.0 OR LESS	12"	–	12"	–	12"	–	12"	–	1 & 3 (TOP)	>8'-0" TO 9'-8"
	12"	6"	12"	12"	12"	12"	12"	6 1/2"	1, 9+(BOTTOM)	
	12"	–	12"	–	12"	–	12"	–	2, 9+(TOP)	
	12"	6"	12"	12"	12"	12"	12"	6 1/2"	2 (BOTTOM)	
	12"	6"	12"	12"	12"	12"	12"	6 1/2"'	3 (BOTTOM)	
	12"	–	12"	–	12"	–	12"	–	4 (TOP)	
	12"	6"	12"	12"	12"	12"	12"	6 1/2"	4 (BOTTOM)	
	7"	–	–	–	10"	–	–	–	5 (TOP/BOTTOM) 7 (TOP)	
	10"	–	–	–	12"	–	–	–	6 (TOP)	
	8"	–	–	–	11 1/2"	–	–	–	6 (BOTTOM)	
	8"	–	–	–	11"	–	–	–	7 (BOTTOM)	
	–	–	–	–	12"	6"	–	–	8 (TOP/BOTTOM)	

MAXIMUM A.S.D. DESIGN PRESSURE RATING(p.s.f.)	MAXIMUM ANCHORS SPACING FOR E. D. = 3 1/2" **								APPLICABLE TO SECTIONS # & ANY COMBINATION OF THEM	MAXIMUM PANEL LENGTH "L" (ft.)
	TAPCONS OR ULTRACONS		RED HD. DYNABOLT		PANELMATES OR HILLMAN S.S ROD		CF TAP-GRIP			
	TO CONCRETE	TO MASONRY	TO CONCRETE	TO MASONRY	TO CONCRETE	TO MASONRY	TO CONCRETE	TO MASONRY		
>+40.0,-45.0 TO +50.0,-55.0	12"	–	12"	–	12"	–	12"	–	1 & 3 (TOP)	8'-0" OR LESS
	12"	6"	12"	12"	12"	12"	12"	7"	1, 9+(BOTTOM)	
	12"	–	12"	–	12"	–	12"	–	2, 9+(TOP)	
	12"	6"	12"	12"	12"	12"	12"	7"	2 (BOTTOM)	
	12"	6"	12"	12"	12"	12"	12"	7"	3 (BOTTOM)	
	12"	–	12"	–	12"	–	12"	–	4 (TOP)	
	12"	6"	12"	12"	12"	12"	12"	7"	4 (BOTTOM)	
	7"	–	–	–	10 1/2"	–	–	–	5 (TOP/BOTTOM) 7 (TOP)	
	10"	–	–	–	12"	–	–	–	6 (TOP)	
	8"	–	–	–	12"	–	–	–	6 (BOTTOM)	
	8"	–	–	–	11 1/2"	–	–	–	7 (BOTTOM)	
	–	–	–	–	12"	6"	–	–	8 (TOP/BOTTOM)	
>+40.0, -45.0 TO +50.0, -55.0	8"	–	7"	–	12"	–	5 1/2"	–	1 & 3 (TOP)	>8'-0" TO 9'-8"
	12"	5"	11"	10"	12"	9 1/2"	9"	5"	1, 9+(BOTTOM)	
	12"	–	11"	–	12"	–	9"	–	2, 9+(TOP)	
	12"	5"	11"	10"	12"	9 1/2"	9"	5"	2 (BOTTOM)	
	12"	5"	11"	10"	12"	9 1/2"	9"	5"	3 (BOTTOM)	
	12"	–	11"	–	12"	–	9"	–	4 (TOP)	
	12"	5"	11"	10"	12"	9 1/2"	9"	5"	4 (BOTTOM)	
	5"	–	–	–	7 1/2"	–	–	–	5 (TOP/BOTTOM) 7 (TOP)	
	8"	–	–	–	10 1/2"	–	–	–	6 (TOP)	
	6"	–	–	–	8 1/2"	–	–	–	6 (BOTTOM)	
	6"	–	–	–	8"	–	–	–	7 (BOTTOM)	
	–	–	–	–	12"	6"	–	–	8 (TOP/BOTTOM)	

ACTUAL E. D.	FACTOR		
	TAPCON OR ULTRACONS	DYNABOLT /PANELMATES	CF TAP-GRIP
3"	–	.86	1.00
2 1/2"	–	.71	.80
2"	–	.50	–
1 1/2"	.35	–	–

\+ ONLY TAPCON OR ULTRACONS ANCHORS ARE ALLOWED FOR MOUNTING SECTION 9.

* SEE SHEET 7 & 8 OF 8 FOR ANCHORS TYPE & SPACING FOR INSTALLATIONS INTO WOOD FRAME BUILDINGS.

** MAXIMUM ANCHOR SPACINGS ARE VALID FOR 3 1/2" EDGE DISTANCE. FOR E. D. LESS THAN 3 1/2", REDUCE ANCHOR SPACING BY MULTIPLYING SPACINGS SHOWN ON SCHEDULE BY THE FOLLOWING FACTORS. (Min. E. D. FOR ELCO PANELMATE IS 2 1/2").
FOR THIS OPERATION TO BE MADE REDUCED SPACINGS RESULTING FROM APPLYING ABOVE FACTORS
SHALL NOT RESULT ON SPACINGS LESS THAN 3" FOR ALL ANCHORS (EXCEPT +4.5" FOR RED HD. DYNABOLT ANCHORS).

WALTER A. TILLIT JR. LICENSE No. 44167 STATE OF FLORIDA PROFESSIONAL ENGINEER

P.E. SEAL/SIGNATURE/DATE

© 2026 TILTECO, INC.

TILTECO INC.
TILLIT TESTING & ENGINEERING COMPANY
6355 N.W. 36th. St., Ste. 305, VIRGINIA GARDENS, Fl. 33166
Phone : (305)871-1530 . Fax : (305)871-1531
CA-0006719
WALTER A. TILLIT Jr. P.E.
FLORIDA Lic. # 44167

FLORIDA BUILDING CODE (Non High Velocity Hurricane Zone)

24 GAGE GALVANIZED BERTHA STEEL STORM PANEL (2.25" DEEP)

EASTERN METAL SUPPLY, INC
4268 WEST ROADS DRIVE
WEST PALM BEACH, FL. 33407
PHONE: (561)209-8263
FAX: (561)841-1716

REV. No	DESCRIPTION	DATE	REV. No	DESCRIPTION	DATE
1	OLD 23-160	7/23/26	3		
2			4		

W.H.
DRAWN BY:
7/23/2026
DATE:
26-231
DRAWING No
SHEET 5 OF 8

MAXIMUM A.S.D. DESIGN PRESSURE RATING (p.s.f.) AND CORRESPONDING MAXIMUM ANCHOR SPACING SCHEDULE FOR INSTALLATIONS INTO CONCRETE AND CONCRETE BLOCK STRUCTURES *

E. D. = EDGE DISTANCE

THIS SCHEDULE INDICATES REQUIRED ANCHOR SPACING FOR A GIVEN DESIGN LOAD AND PANEL LENGTH. HOWEVER MAXIMUM PANEL LENGTH FOR A GIVEN DESIGN LOAD MUST BE VERIFIED AS PER SCHEDULE ON SHEET 4 OF 8.

MAXIMUM A.S.D. DESIGN PRESSURE RATING(p.s.f.)	MAXIMUM ANCHORS SPACING FOR E. D. = 3 1/2" **								APPLICABLE TO SECTIONS # & ANY COMBINATION OF THEM	MAXIMUM PANEL LENGTH "L" (ft.)
	TAPCONS OR ULTRACONS		RED HD. DYNABOLT		PANELMATES OR HILLMAN S.S ROD		CF TAP-GRIP			
	TO CONCRETE	TO MASONRY	TO CONCRETE	TO MASONRY	TO CONCRETE	TO MASONRY	TO CONCRETE	TO MASONRY		
>+50.0,-55.0 TO +70.0,-80.0	8"	–	7"	–	12"	–	6"	–	1 & 3 (TOP)	8'-0" OR LESS
	12"	12"	11"	10"	12"	9 1/2"	9"	5"	1, 9+(BOTTOM)	
	12"	–	11"	–	12"	–	9"	–	2, 9+(TOP)	
	12"	5"	11"	10"	12"	9 1/2"	9"	5"	2 (BOTTOM)	
	12"	5"	11"	10"	12"	9 1/2"	9"	5"	3 (BOTTOM)	
	12"	–	11"	–	12"	–	9"'	–	4 (TOP)	
	12"	5"	11"	10"	12"	9 1/2"	9"	5"	4 (BOTTOM)	
	5"	–	–	–	8"	–	–	–	5 (TOP/BOTTOM) 7 (TOP)	
	8"	–	–	–	10 1/2"	–	–	–	6 (TOP)	
	6"	–	–	–	9"	–	–	–	6 (BOTTOM)	
	6"	–	–	–	8 1/2"	–	–	–	7 (BOTTOM)	
	–	–	–	–	12"	6"	–	–	8 (TOP/BOTTOM)	

MAXIMUM A.S.D. DESIGN PRESSURE RATING(p.s.f.)	MAXIMUM ANCHORS SPACING FOR E. D. = 3 1/2" **								APPLICABLE TO SECTIONS # & ANY COMBINATION OF THEM	MAXIMUM PANEL LENGTH "L" (ft.)
	TAPCONS OR ULTRACONS		RED HD. DYNABOLT		PANELMATES OR HILLMAN S.S ROD		CF TAP-GRIP			
	TO CONCRETE	TO MASONRY	TO CONCRETE	TO MASONRY	TO CONCRETE	TO MASONRY	TO CONCRETE	TO MASONRY		
>+50.0,-55.0 TO +70.0,-80.0	6"	–	5"	–	9 1/2"	–	4"	–	1 & 3 (TOP)	>8'-0" TO 8'-4"
	11"	12"	9"	8"	12"	8"	7 1/2"	4"	1, 9+(BOTTOM)	
	11"	–	9"	–	12"	–	7 1/2"	–	2, 9+(TOP)	
	11"	4"	9"	8"	12"	8"	7 1/2"'	4"	2 (BOTTOM)	
	11"	4"	9"	8"	12"	8"	7 1/2"	4"	3 (BOTTOM)	
	11"	–	9"	–	12"	–	7 1/2"	–	4 (TOP)	
	11"	4"	9"	8"	12"	8"	7 1/2"	4"	4 (BOTTOM)	
	4"	–	–	–	6 1/2"	–	–	–	5 (TOP/BOTTOM) 7 (TOP)	
	6"	–	–	–	8 1/2"	–	–	–	6 (TOP)	
	5"	–	–	–	7"	–	–	–	6 (BOTTOM)	
	5"	–	–	–	7"	–	–	–	7 (BOTTOM)	
	–	–	–	–	12"	6"	–	–	8 (TOP/BOTTOM)	

MAXIMUM A.S.D. DESIGN PRESSURE RATING(p.s.f.)	MAXIMUM ANCHORS SPACING FOR E. D. = 3 1/2" **								APPLICABLE TO SECTIONS # & ANY COMBINATION OF THEM	MAXIMUM PANEL LENGTH "L" (ft.)
	TAPCONS OR ULTRACONS		RED HD. DYNABOLT		PANELMATES OR HILLMAN S.S ROD		CF TAP-GRIP			
	TO CONCRETE	TO MASONRY	TO CONCRETE	TO MASONRY	TO CONCRETE	TO MASONRY	TO CONCRETE	TO MASONRY		
>+50.0,-55.0 TO +70.0,-80.0	5"	–	4"	–	8"	–	3"	–	1 & 3 (TOP)	>8'-4" TO 9'-8"
	10"	3"	8"	7"	12"	7"	6 1/2"	3 1/2"	1, 9+(BOTTOM)	
	10"	–	8"	–	12"	–	6 1/2"	–	2, 9+(TOP)	
	10"	3"	8"	7"	12"	7"	6 1/2"	3 1/2"	2 (BOTTOM)	
	10"	3"	8"	7"	12"	7"	6 1/2"	3 1/2"	3 (BOTTOM)	
	10"	–	8"	–	12"	–	6 1/2"	–	4 (TOP)	
	10"	3"	8"	7"	12"	7"	6 1/2"	3 1/2"	4 (BOTTOM)	
	4"	–	–	–	5 1/2"	–	–	–	5 (TOP/BOTTOM) 7 (TOP)	
	6"	–	–	–	7 1/2"	–	–	–	6 (TOP)	
	5"	–	–	–	61/2"	–	–	–	6 (BOTTOM)	
	4"	–	–	–	6"	–	–	–	7 (BOTTOM)	
	–	–	–	–	12"	–	–	–	8 (TOP/BOTTOM)	

ACTUAL E. D.	FACTOR		
	TAPCONS OR ULTRACONS	DYNABOLT /PANELMATES	CF TAP-GRIP
3"	–	.86	1.00
2 1/2"	–	.71	.80
2"	–	.50	–
1 1/2"	.35	–	–

\+ ONLY TAPCON OR ULTRACONS ANCHORS ARE ALLOWED FOR MOUNTING SPACING .9.

* SEE SHEET 7 & 8 OF 8 FOR ANCHORS TYPE & SPACING FOR INSTALLATIONS INTO WOOD FRAME BUILDINGS.

** MAXIMUM ANCHOR SPACINGS ARE VALID FOR 3 1/2" EDGE DISTANCE. FOR E. D. LESS THAN 3 1/2", REDUCE ANCHOR SPACING BY MULTIPLYING SPACINGS SHOWN ON SCHEDULE BY THE FOLLOWING FACTORS. (MIN. E. D. FOR ELCO PANELMATE IS 2 1/2"). FOR THIS OPERATION TO BE MADE REDUCED SPACINGS RESULTING FROM APPLYING ABOVE FACTORS SHALL NOT RESULT ON SPACINGS LESS THAN 3" FOR ALL ANCHORS (EXCEPT +4.5" FOR RED HD. DYNABOLT ANCHORS).

WALTER A. HLLIT JR. LICENSE No 44167 STATE OF FLORIDA PROFESSIONAL ENGINEER

P.E. SEAL/SIGNATURE/DATE

©2026 TILTECO, INC.

TILTECO INC.
TILLIT TESTING & ENGINEERING COMPANY
6355 N.W. 36th. St., Ste. 305, VIRGINIA GARDENS, Fl. 33166
Phone : (305)871-1530 . Fax : (305)871-1531
CA-0006719
WALTER A. TILLIT Jr. P.E.
FLORIDA Lic. # 44167

FLORIDA BUILDING CODE (Non High Velocity Hurricane Zone)

24 GAGE GALVANIZED BERTHA STEEL STORM PANEL (2.25" DEEP)

EASTERN METAL SUPPLY, INC
4268 WEST ROADS DRIVE
WEST PALM BEACH, FL. 33407
PHONE: (561)209-8263
FAX: (561)841-1716

W.H.
DRAWN BY:

7/23/2026
DATE:

26-231
DRAWING No

REV. No	DESCRIPTION	DATE	REV. No	DESCRIPTION	DATE
1	OLD 23-160	7/23/26	3		
2			4		

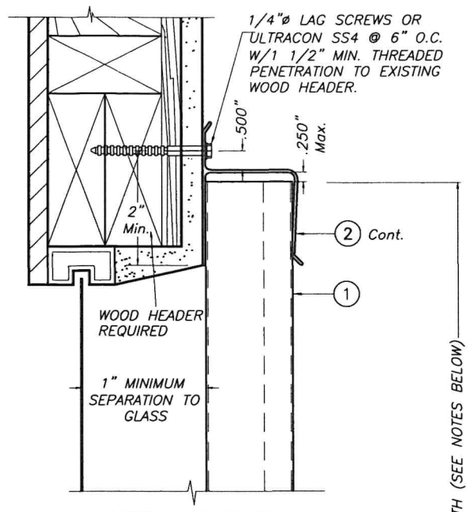

ALTERNATIVE 1

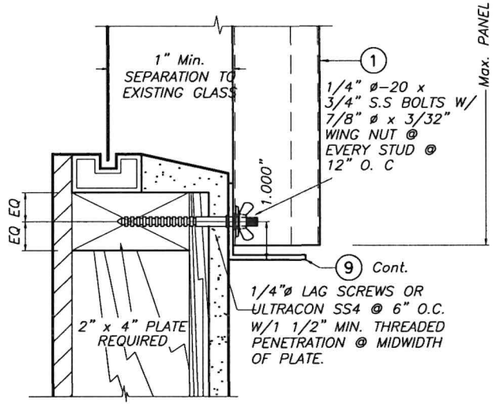

ALTERNATIVE 2

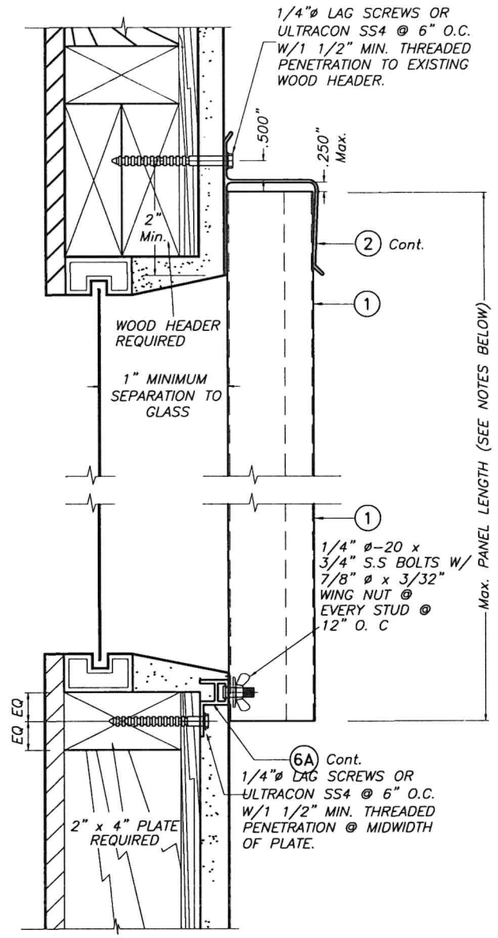

ALTERNATIVE 4

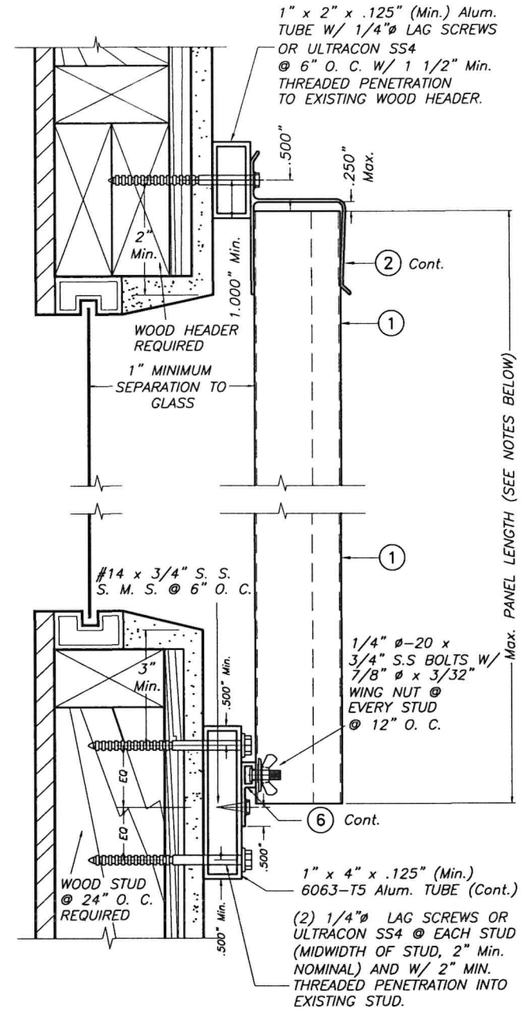

ALTERNATIVE 5

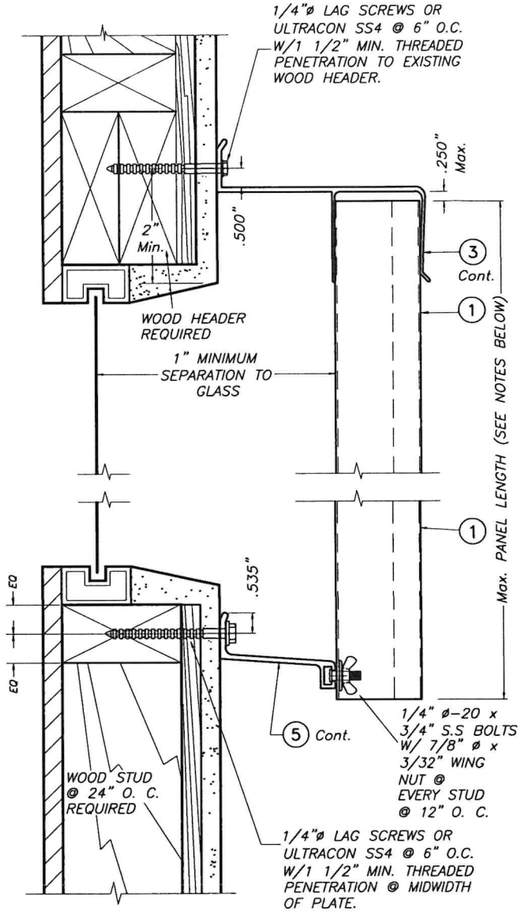

ALTERNATIVE 6

WALL MOUNTING INSTALLATIONS

SECTIONS A

SCALE : 1/4" = 1"

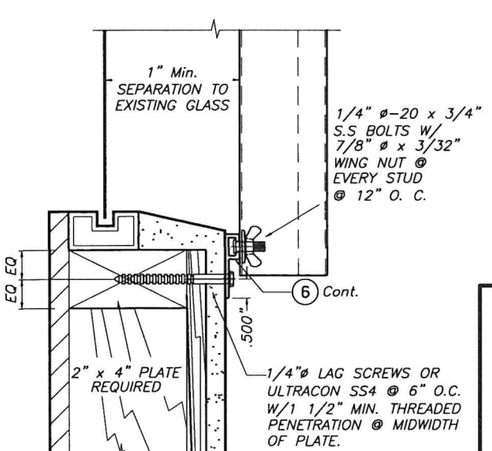

ALTERNATIVE 3

NOTE FOR COMBINATION OF SECTIONS:

WALL MOUNTING SECTIONS CAN BE COMBINED IN ANY WAY TO SUIT ANY INSTALLATION.

NOTES:

1. INSTALLATIONS ARE ONLY VALID FOR MAX. A.S.D. DESIGN PRESSURE RATING UP TO +60.0, −65.0 psf AND PANEL'S LENGTHS UP TO 7'−8".
2. FOR WOOD FRAME CONSTRUCTION: WOOD MEMBERS TO BE SOUTHERN PINE No. 2, W/ SPECIFIC DENSITY OF 0.55 OR EQUAL.
3. ONLY STAINLESS STEEL ANCHORS ARE ALLOWED AT INSTALLATION WITHIN 300ft OF THE COASTAL SHORELINE.

INSTALLATION DETAILS ON EXISTING WOOD BUILDINGS

WALTER A. TILLIT JR. LICENSE No. 44167 STATE OF FLORIDA PROFESSIONAL ENGINEER

P.E. SEAL/SIGNATURE/DATE

©2026 TILTECO, INC.

TILTECO INC.
TILLIT TESTING & ENGINEERING COMPANY
6355 N.W. 36th. St., Ste. 305, VIRGINIA GARDENS, Fl. 33166
Phone : (305)871-1530 . Fax : (305)871-1531
CA-0006719
WALTER A. TILLIT Jr. P.E.
FLORIDA Lic. # 44167

FLORIDA BUILDING CODE (Non High Velocity Hurricane Zone)

24 GAGE GALVANIZED BERTHA STEEL STORM PANEL (2.25" DEEP)

EASTERN METAL SUPPLY, INC
4268 WEST ROADS DRIVE
WEST PALM BEACH, FL. 33407
PHONE: (561)209-8263
FAX: (561)841-1716

REV. No	DESCRIPTION	DATE	REV. No	DESCRIPTION	DATE
1	OLD 23-160	7/23/26	3		
2			4		

W.H.
DRAWN BY:

7/23/2026
DATE:

26-231
DRAWING No

SHEET 7 OF 8

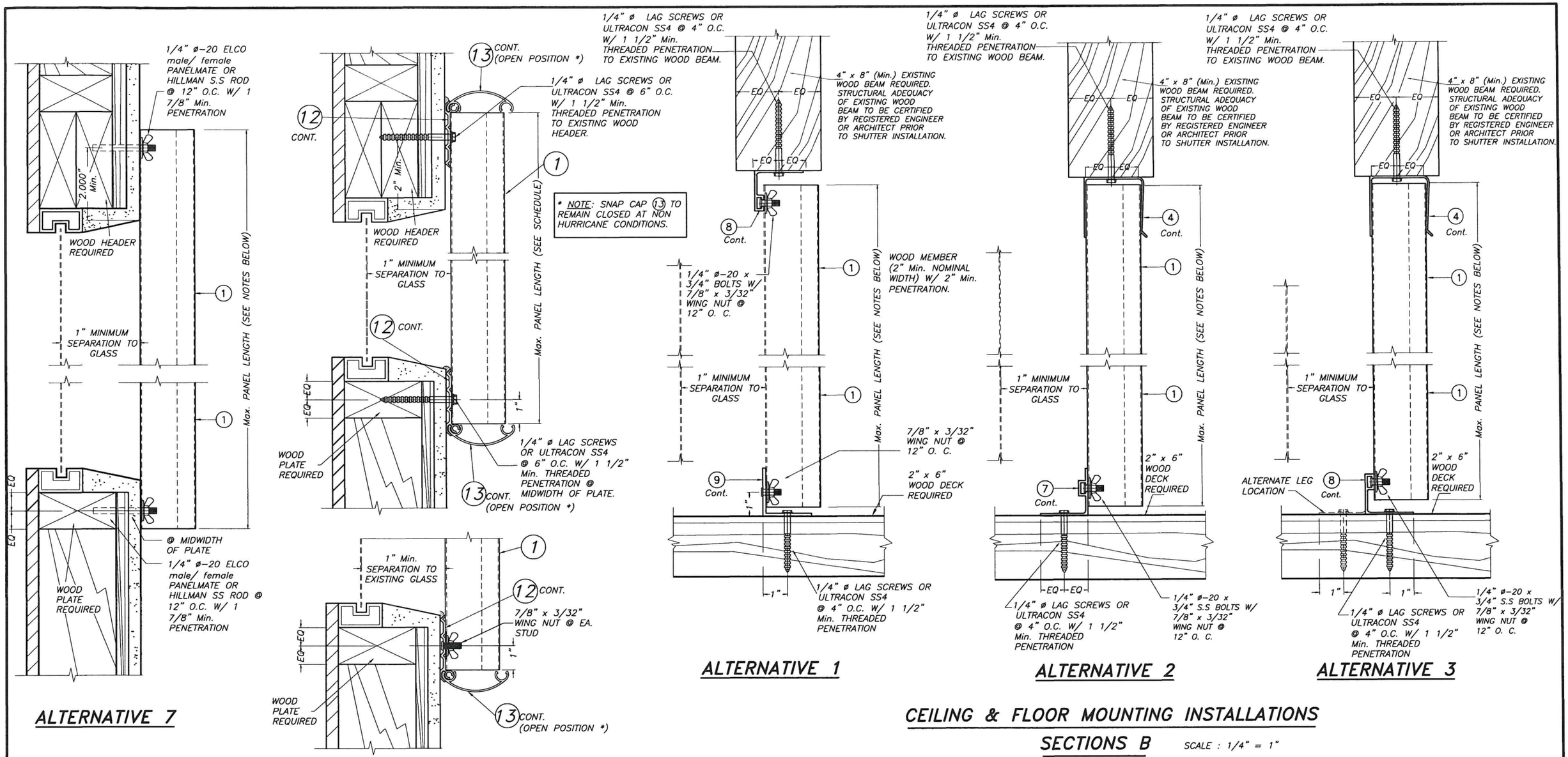

WALL MOUNTING INSTALLATION

SECTION A

SCALE : 1/4" = 1"

CEILING & FLOOR MOUNTING INSTALLATIONS

SECTIONS B

SCALE : 1/4" = 1"

INSTALLATION DETAILS ON EXISTING WOOD BUILDINGS

NOTE FOR COMBINATION OF SECTIONS:

FLOOR/ WALL/ CEILING MOUNTING SECTIONS CAN BE COMBINED IN ANY WAY TO SUIT ANY INSTALLATION.

NOTES:

1. INSTALLATIONS ARE ONLY VALID FOR MAX. A.S.D. DESIGN PRESSURE RATING UP TO +60.0, -65.0 psf AND PANEL'S LENGTHS UP TO 7'-8".
2. FOR WOOD FRAME CONSTRUCTION: WOOD MEMBERS TO BE SOUTHERN PINE No. 2, W/ SPECIFIC DENSITY OF 0.55 OR EQUAL.
3. ONLY STAINLESS STEEL ANCHORS ARE ALLOWED AT INSTALLATION WITHIN 300ft OF THE COASTAL SHORELINE.

WALTER A. TILLIT JR. LICENSE No. 44167 STATE OF FLORIDA PROFESSIONAL ENGINEER 7/22/2026

P.E. SEAL/SIGNATURE/DATE

©2026 TILTECO, INC.

TILTECO INC.
TILLIT TESTING & ENGINEERING COMPANY
6355 N.W. 36th. St., Ste. 305, VIRGINIA GARDENS, Fl. 33166
Phone : (305)871-1530 . Fax : (305)871-1531
CA-0006719
WALTER A. TILLIT Jr. P.E.
FLORIDA Lic. # 44167

FLORIDA BUILDING CODE (Non High Velocity Hurricane Zone)

24 GAGE GALVANIZED BERTHA STEEL STORM PANEL (2.25" DEEP)

EASTERN METAL SUPPLY, INC
4268 WEST ROADS DRIVE
WEST PALM BEACH, FL. 33407
PHONE: (561)209-8263
FAX: (561)841-1716

REV. No	DESCRIPTION	DATE	REV. No	DESCRIPTION	DATE
1	OLD 23-160	7/23/26	3		
2			4		

W.H.
DRAWN BY:

7/23/2026
DATE:

26-231
DRAWING No

SHEET 8 OF 8